International Journal of
Scientific Engineering and Technology Research

ISSN 2319-8885
Vol.02,Issue.19,
December-2013,
Pages:2201-2207

www.semargroups.org,
www.ijsetr.com

Design and Simulation of Cascaded H-Bridge Multilevel Inverter based DSTATCOM for Compensation of Reactive Power and Harmonics

D. SHEKSHAVALI[1], DR. N. SREENIVASULU[2]

[1]Research Scholar, Dept of EEE, Intell Engineering College, Anantapur, AP-INDIA, E-mail: shaiksha456@gmail.com.
[2]Assoc Prof, Dept of EEE, Intell Engineering College, Anantapur, AP-INDIA, E-mail: anusree@gmail.com.

Abstract: This paper presents an investigation of five-Level Cascaded H - bridge (CHB) Inverter as Distribution Static Compensator (DSTATCOM) in Power System (PS) for compensation of reactive power and harmonics. The advantages of CHB inverter are low harmonic distortion, reduced number of switches and suppression of switching losses. The DST ATCOM helps to improve the power factor and eliminate the Total Harmonics Distortion (THD) drawn from a Non-Liner Diode Rectifier Load (NLDRL). The D-Q reference frame theory is used to generate the reference compensating currents for DSTATCOM while Proportional and Integral (PI) control is used for capacitor dc voltage regulation. A CHB Inverter is considered for shunt compensation of a 11 kV distribution system. Finally a level shifted PWM (LSPWM) and phase shifted PWM (PSPWM) techniques are adopted to investigate the performance of CHB Inverter. The results are obtained through Matlab/Simulink software package.

Keywords: DSTATCOM, Level Shifted Pulse Width Modulation (LSPWM), Phase Shifted Pulse Width Modulation (PSPWM), Proportional-Integral (PI) Control, CRB Multilevel Inverter, D-Q Reference Frame Theory.

I. INTRODUCTION

Modern power systems are of complex networks, where hundreds of generating stations and thousands of load centers are interconnected through long power transmission and distribution networks. Even though the power generation is fairly reliable, the quality of power is not always so reliable. Power distribution system should provide with an uninterrupted flow of energy at smooth sinusoidal voltage at the contracted magnitude level and frequency to their customers. PS especially distribution systems, have numerous non linear loads, which significantly affect the quality of power. Apart from non linear loads, events like capacitor switching, motor starting and unusual faults could also inflict power quality (PQ) problems. PQ problem is defined as any manifested problem in voltage I current or leading to frequency deviations that result in failure or mal operation of customer equipment. Voltage sags and swells are among the many PQ problems the industrial processes have to face. Voltage sags are more severe. During the past few decades, power industries have proved that the adverse impacts on the PQ can be mitigated or avoided by conventional means, and that techniques using fast controlled force commutated power electronics (PE) are even more effective. PQ compensators can be categorized into two main types. One is shunt connected compensation device that effectively eliminates harmonics. The other is the series connected device, which has an edge over the shunt type for correcting the distorted system side voltages and voltage sags caused by power transmission system faults. The STATCOM used in distribution systems is called DSTACOM (Distribution-STACOM) and its configuration is the same, but with small modifications. It can exchange both active and reactive power with the distribution system by varying the amplitude and phase angle of the converter voltage with respect to the line terminal voltage. A multilevel inverter can reduce the device voltage and the output harmonics by increasing the number of output voltage levels. There are several types of multilevel inverters: cascaded R-bridge (CRB), neutral point clamped, flying capacitor [3-6]. In particular, among these topologies, CRB inverters are being widely used because of their modularity and simplicity. Various modulation methods can be applied to CRB inverters. CRB inverters can also increase the number of output voltage levels easily by increasing the number of R-bridges. This paper presents a DSTATCOM with a proportional integral controller based CRB multilevel inverter for the harmonics and reactive power mitigation of the nonlinear loads. This type of arrangements have been widely used for PQ applications due to increase in the number of voltage levels, low switching losses, low electromagnetic compatibility for hybrid filters and higher order harmonic elimination.

II. DSTATCOM

Distribution Static Synchronous Compensator (DSTATCOM) is a shunt connected device. This can

perform load compensation, i.e. power factor correction, harmonic filtering, and load balancing etc. when connected at the load terminals. It can also perform voltage regulation when connected to a distribution bus. In this mode it can hold the bus voltage constant against any unbalance or distortion in the distribution system. The DSTATCOM must be able to inject an unbalanced and harmonically distorted current to eliminate unbalance or distortions in the load current or the supply voltage. The structure of DSTATCOM (fig.1) is similar to STATCOM but its control is different from that of a STATCOM. Basically, the DSTATCOM system is comprised of three main parts: a VSC, a set of coupling reactors and a controller. The basic principle of a DSTATCOM installed in a power system is the generation of a controllable ac voltage source by a voltage source inverter (VSI) connected to a dc capacitor (energy storage device). The ac voltage source, in general, appears behind a transformer leakage reactance. The active and reactive power transfer between the power system and the DSTATCOM is caused by the voltage difference across this reactance. The DSTATCOM is connected to the power networks at a PCC, where the voltage-quality problem is a concern. All required voltages and currents are measured and are fed into the controller to be compared with the commands. The controller then performs feedback control and outputs a set of switching signals to drive the main semiconductor switches (IGBT's, which are used at the distribution level) of the power converter accordingly.

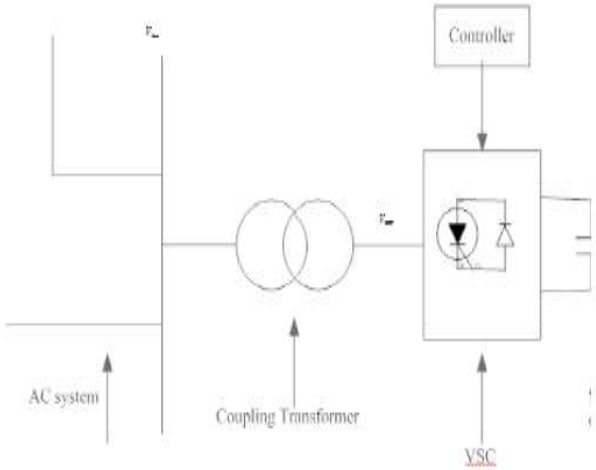

Fig.1 Basic block diagram of DSTATCOM

The proposed cascaded H-bridge multilevel inverter based DSTATCOM uses a standard three-leg inverter (one leg for each phase) and an H-bridge in series with each inverter leg which uses a capacitor as the dc power. To see how the system works, a simplified single phase topology is shown in Fig. 2. The output voltage v1 of this leg of the bottom inverter (with respect to the ground) is either +Vdc/2 (S5 closed) or −Vdc/2 (S6 closed). This leg is connected in series with a full H bridge, which, in turn, is supplied by a capacitor voltage. If the capacitor is kept charged to Vdc/2, then the output voltage of the H-bridge can take on the values +Vdc/2 (S1 and S4 closed), 0 (S1 and S2 closed or S3 and S4 closed), or −Vdc/2 (S2 and S3 closed). When the output voltage v = v1 + v2 is required to be zero, one can either set v1 = +Vdc/2 and v2 = −Vdc/2 or v1 = −Vdc/2 and v2 = +Vdc/2. If S1 and S4 are closed (so thatv2 = +Vdc/2) and S6 is closed (so that v1 = −Vdc/2), then the capacitor is discharging and v = v1 + v2 = 0. On the other hand, if S2 and S3 are closed (so that v2 = −Vdc/2) and S5 is also closed (so that v1 = +Vdc/2), then the capacitor is charging and v = v1 + v2 = 0 source.

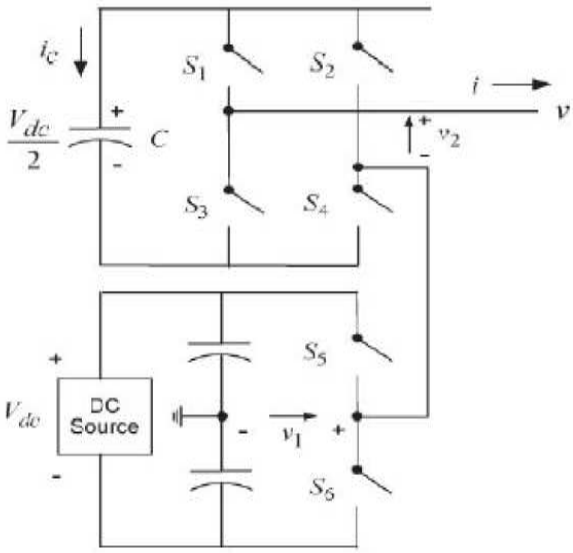

Fig.2 Single phase topology of proposed DSTATCOM

III. MODULATION STRATEGY

The modulation methods used in multilevel inverters can be classified according to switching frequency. Methods that work with high switching frequencies have many commutations for the power semiconductors in one period of the fundamental output voltage. A very popular method in industrial applications is the classic carrier-based sinusoidal PWM (SPWM) that uses the phase-shifting technique to reduce the harmonics in the load voltage. Another interesting alternative is the SVM strategy, which has been used to reduce the harmonics. There are several kinds of modulation control methods such as traditional sinusoidal pulse width modulation (SPWM), space vector PWM, harmonic optimization or selective harmonic elimination and active harmonic elimination and they all can be used for inverter modulation control. Space-vector PWM methods generally have the following features: good utilization of dc-link voltage, low current ripple, and relatively easy hardware implementation by a digital signal processor (DSP). These

features make it suitable for high-voltage high power applications. As the number of levels increases, redundant switching states and the complexity of selecting switching states increase dramatically.

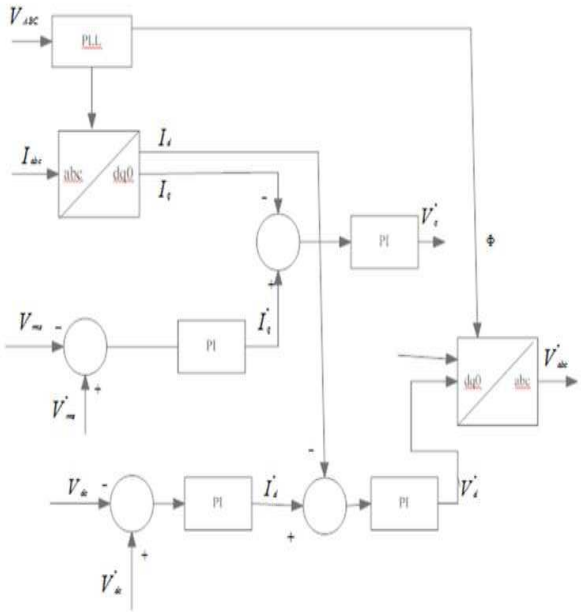

Fig.3 Block diagram of controller

The voltage controller technique (also called as decouple technique) is used as the control technique for DSTATCOM. This control strategy uses the dq0 rotating reference frame because it offers higher accuracy than stationary frame-based techniques. In this V_{abc} are the three-phase terminal voltages, Iabc are the three-phase currents injected by the DSTATCOM into the network, Vrms is the root-mean-square (rms) terminal voltage, Vdc is the dc voltage measured in the capacitor, and the superscripts indicate reference values. Such a controller employs a phase-locked loop (PLL) to synchronize the three phase voltages at the converter output with the zero crossings of the fundamental component of the phase-A terminal voltage. The block diagram of a proposed control technique is shown in Fig 3. Therefore, the PLL provides the angle φ to the abc-to-dq0 (and dq0-to-abc) transformation. There are also four proportional-integral (PI) regulators. The first one is responsible for controlling the terminal voltage through the reactive power exchange with the ac network. Another PI regulator is responsible for keeping the dc voltage constant through a small active power exchange with the ac network, compensating the active power losses in the transformer and inverter. This PI regulator provides the active current reference Id*. The other two PI regulators determine voltage reference Vd*, and Vq*, which are sent to the PWM signal generator of the converter, after a dq0-to-abc transformation. Finally, Vabc* are the three phase voltages desired at the converter output.

IV. PROPOSED SYSTEM

In present day's power distribution systems is suffering from severe power quality problems. These power quality problems include high reactive power burden, harmonics currents, load unbalance, excessive neutral current etc. The measure of power quality depends upon the needs of the equipment that is being supplied. What is good power quality for an electric motor may not be good enough for a personal computer. Usually the term power quality refers to maintaining a sinusoidal waveform of bus voltages at rated voltage and frequency [2]. The waveform of electric power at generation stage is purely sinusoidal and free from any distortion. Many of the Power conversion and consumption equipment are also designed to function under pure sinusoidal voltage waveforms. However, there are many devices that distort the waveform. These distortions may propagate all over the electrical network. In recent years, there has been an increased use of non-linear loads which has resulted in an increased fraction of non-sinusoidal currents and voltages in Electric Network. The wave shape phenomena associated with power quality may be characterized into synchronous and non synchronous phenomena. Synchronous phenomena refer to those in synchronism with A.C waveform at power frequency [3], [4].

A group of controllers together called Custom Power Devices (CPD), which include the DSTATCOM (distribution static compensator), The DSTATCOM, is a shunt-connected device, which takes care of the power quality problems in the currents It consists of a dc capacitor, three-phase inverter (IGBT, thyristor) module, ac filter, coupling transformer and a control strategy. The basic electronic block of the D-STATCOM is the voltage-sourced inverter that converts an input dc voltage into a three-phase output voltage at fundamental frequency. The D-STACOM employs an inverter to convert the DC link voltage Vdc on the capacitor to a voltage source of adjustable magnitude and phase. Therefore the D-STATCOM can be treated as a voltage controlled source. The D-STATCOM can also be seen as a current-controlled source. The generalized instantaneous reactive power theory which is valid for sinusoidal or non-sinusoidal and balanced or unbalanced three-phase power systems with or without zero-sequence currents were later proposed [9]. The construction controller of the D-STATCOM is used to operate the inverter in such a way that the phase angle between the inverter voltage and the line voltage is dynamically adjusted so that the D-STATCOM generates or absorbs the desired VAR at the point of connection. The phase of the output voltage of the thyristor-based inverter, Vi, is controlled in the same way as the distribution system voltage, Vs.

The DSTATCOM is based on the instantaneous real-power theory; it provides good compensation

characteristics in steady state as well as transient states [8]. The instantaneous real-power theory generates the reference currents required to compensate the distorted line current harmonics and reactive power. It also tries to maintain the dc-bus voltage across the capacitor constant. Another important characteristic of this real-power theory is the simplicity of the calculations, which involves only algebraic calculation [7]. A multilevel inverter can reduce the device voltage and the output harmonics by increasing the number of output voltage levels. There are several types of multilevel inverters: cascaded H-bridge (CHB), neutral point clamped, flying capacitor [3-6]. In particular, among these topologies, CHB inverters are being widely used because of their modularity and simplicity. Various modulation methods can be applied to CHB inverters. CHB inverters can also increase the number of output voltage levels easily by increasing the number of H-bridges. This paper presents a DSTATCOM with a proportional integral controller based CHB multilevel (five level and seven level) inverter for the harmonics and reactive power mitigation of the nonlinear loads. This type of arrangements have been widely used for PQ applications due to increase in the number of voltage levels, low switching losses, low electromagnetic compatibility for hybrid filters and higher order harmonic elimination.

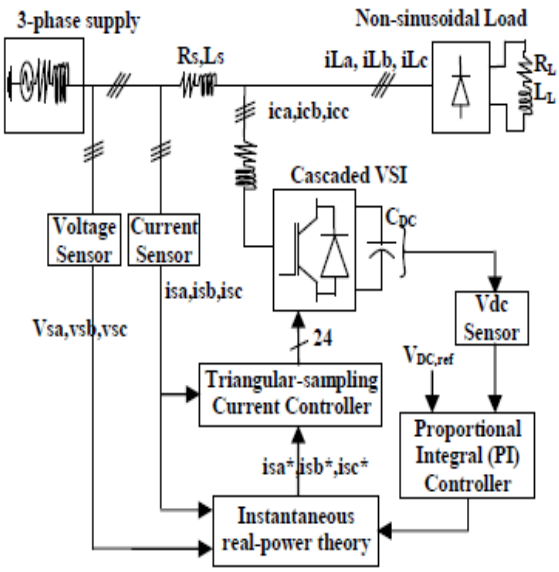

Fig.4. Schematic Diagram of DSTATCOM

Instantaneous real-power theory based cascaded multilevel inverter based DSTATCOM is connected in the distribution network at the PCC through filter inductances and operates in a closed loop. The DSTATCOM system contains a cascaded inverter, RL-filters, a compensation controller (instantaneous real-power theory) and switching signal generator (proposed triangular-sampling current modulator) as shown in the Fig.4. The three-phase supply source connected with non-linear load and these nonlinear loads currents contains fundamental and harmonic components. If the active power filter provides the total reactive and harmonic power, is (t) will be in phase with the utility voltage and would be sinusoidal. At this time, the active filter must provide the compensation current therefore; active power filter estimates the fundamental components and compensating the harmonic current and reactive power.

A. Seven level CHB Inverter

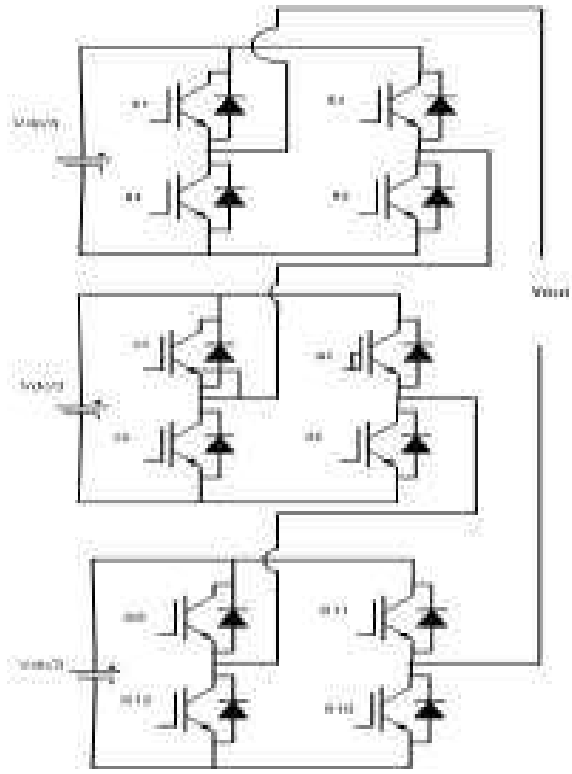

Fig.5. Seven level CHB inverter

Fig.5. Shows the seven level multilevel inverter and Table shows the switching states of the seven level Inverter

TABLE: I: SWITCHING TABLE FOR FULL H-BRIDGE OF SEVEN LEVEL INVERTER

Switches Turn ON	Voltage Level
S1,S2,S6,S8,S10,S12	Vdc/3
S1,S2,S5,S6,S10,S12	2Vdc/3
S1,S2,S5,S6,S9,S10	Vdc
S2,S4,S6,S8,S10,S12	0
S3,S4,S6,S8 S10,S12	-Vdc/3
S3,S4,S7,S8,S10,S12	-2Vdc/3
S3,S4,S7,S8,S11,S12	-Vdc

V. MATLAB/SIMULINK MODELING AND SIMULATION RESULTS

Fig.6 shows the Matab/Simulink power circuit model of DSTATCOM. It consists of five blocks named as source block, non linear load block, control block, APF block and measurements block. The system parameters for simulation study are source voltage of 11kv, 50hz AC supply, DC bus

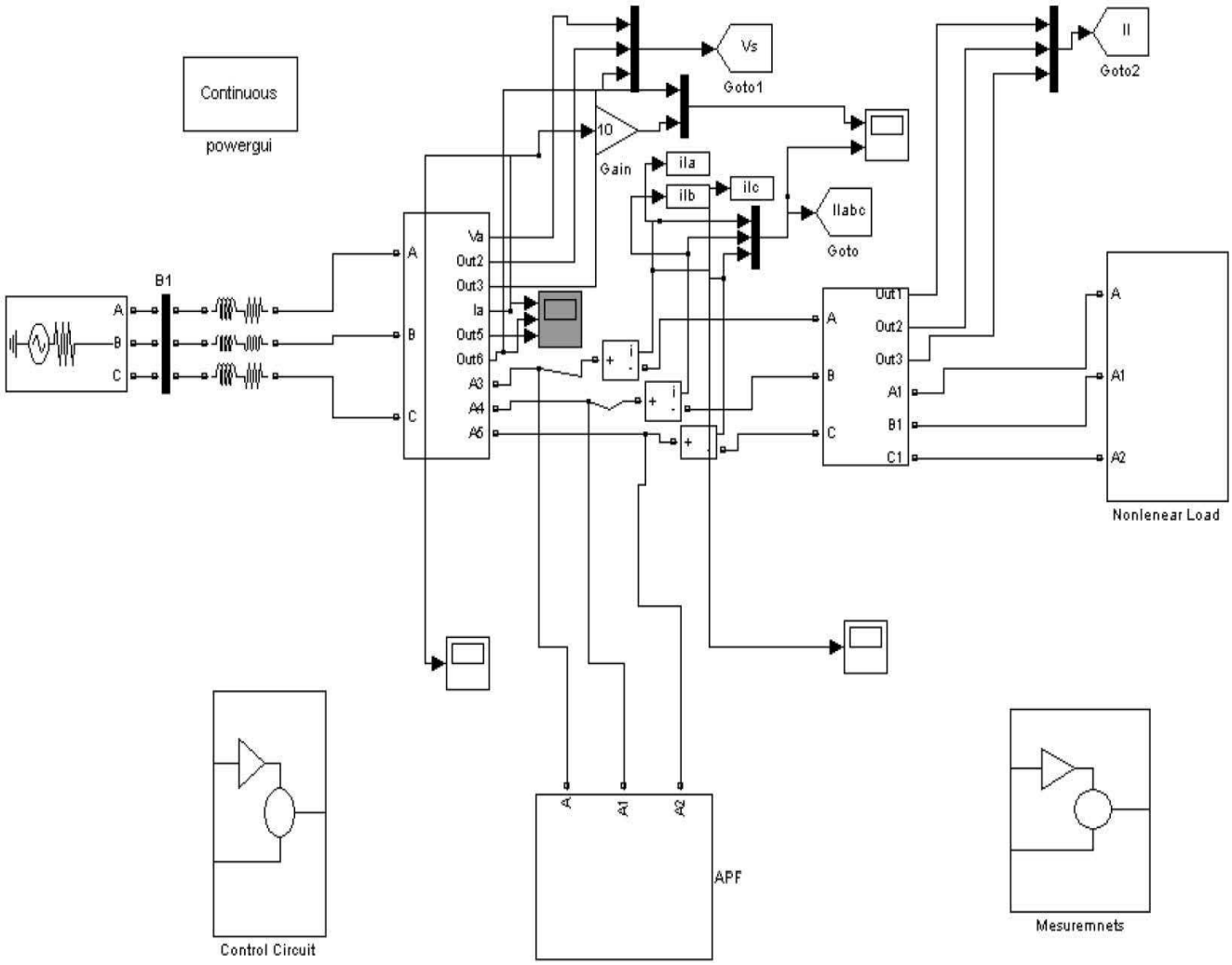

Fig.6. Matlab/Simulink power circuit model of DSTATCOM

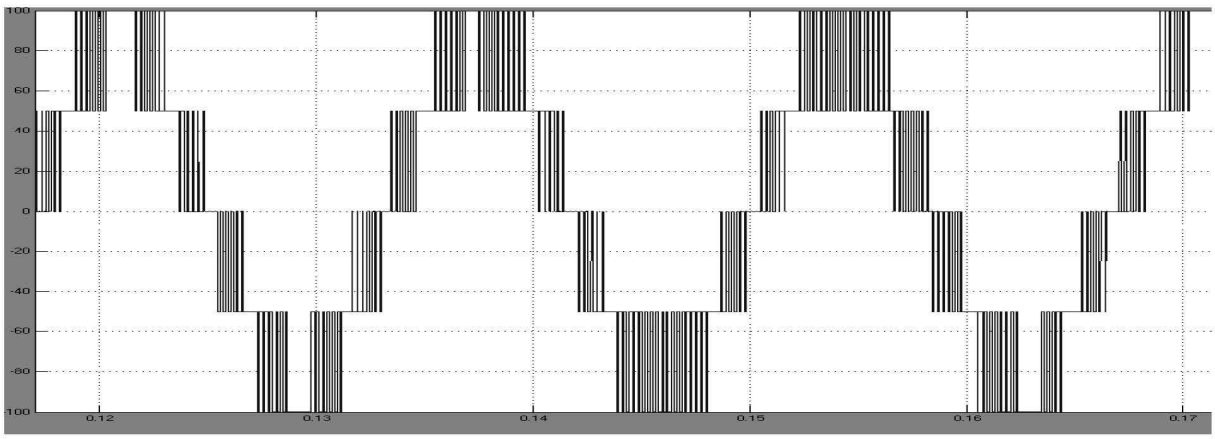

Fig.7. Five level PSCPWM output

capacitance 1550e-6 F, Inverter series inductance 10 mH, Source resistance of 0.1 ohm and inductance of 0.9 mHo Load resistance and inductance are chosen as 30mH and 60 ohms respectively. Fig.7 shows the phase- A voltage of five level output of phase shifted carrier PWM inverter. Fig.8 shows the three phase source voltages, three phase source currents and load currents respectively without DST ATCOM. It is clear that without DST ATCOM load current and source currents are same.

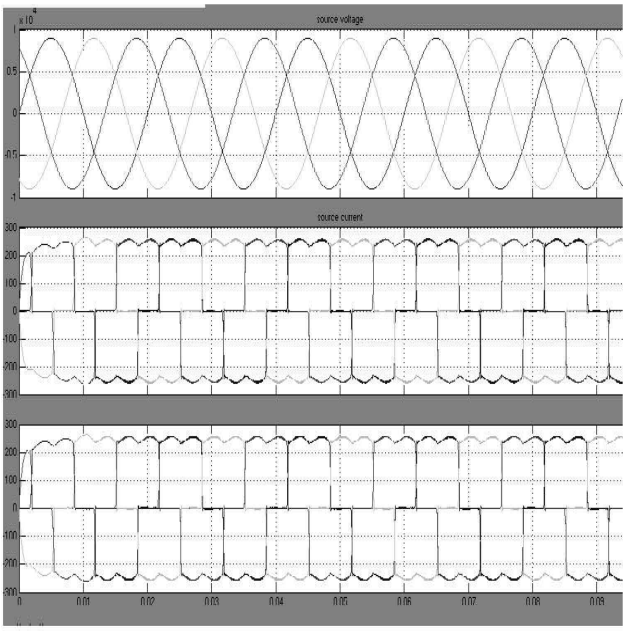

Fig.8. Source voltage, current and load current without DSTATCOM

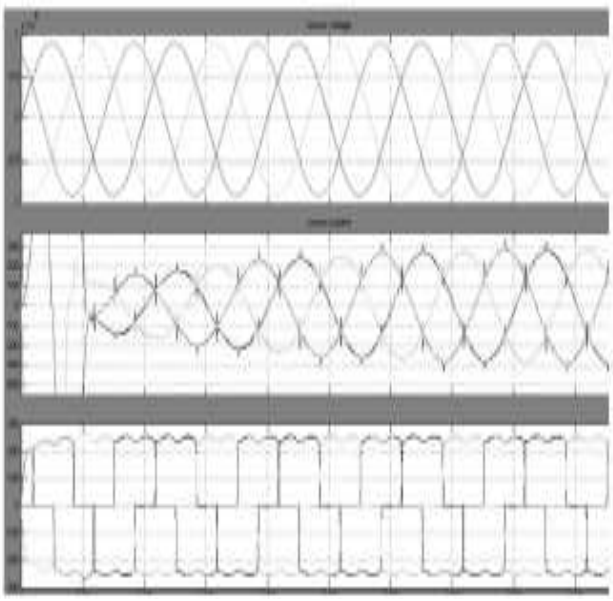

Fig.9. Source voltage, current and load current with DSTATCOM

Fig.9 shows the three phase source voltages, three phase source currents and load currents respectively with DST ATCOM. It is clear that with DST ATCOM even though load current 1S non sinusoidal source currents are sinusoidal. Fig.10 shows the DC bus voltage. The DC bus voltage is regulated to llkv by using PI regulator.

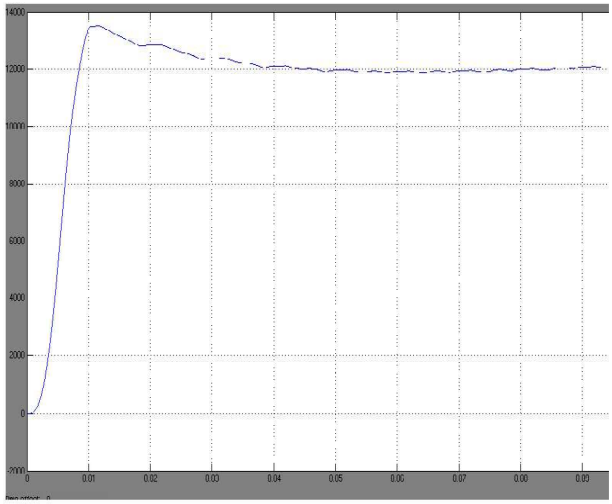

Fig.10. DC Bus Voltage

Fig.10 shows the phase- A source voltage and current, even though the load is non linear RL load the source power factor is unity.

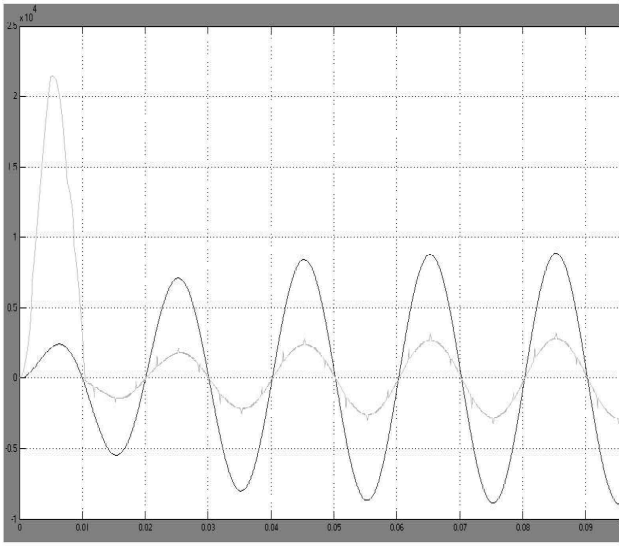

Fig.11. Phase-A source voltage and current

Fig.12 shows the harmonic spectrum of Phase - A Source current without DST ATCOM. The THD of source current without DST ACOM is 36.89%. Fig.13 shows the harmonic spectrum of Phase - A Source current with DST ATCOM. The THD of source current without DST ACOM is 5.05%

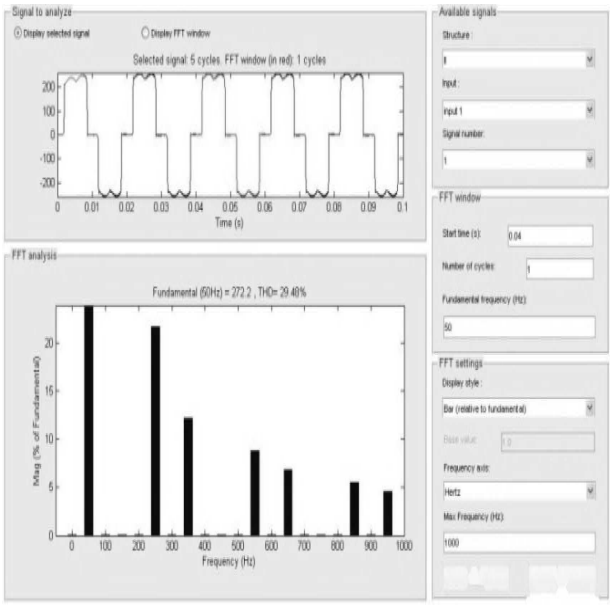

Fig.12. Harmonic spectrum of Phase-A Source current without DSTATCOM

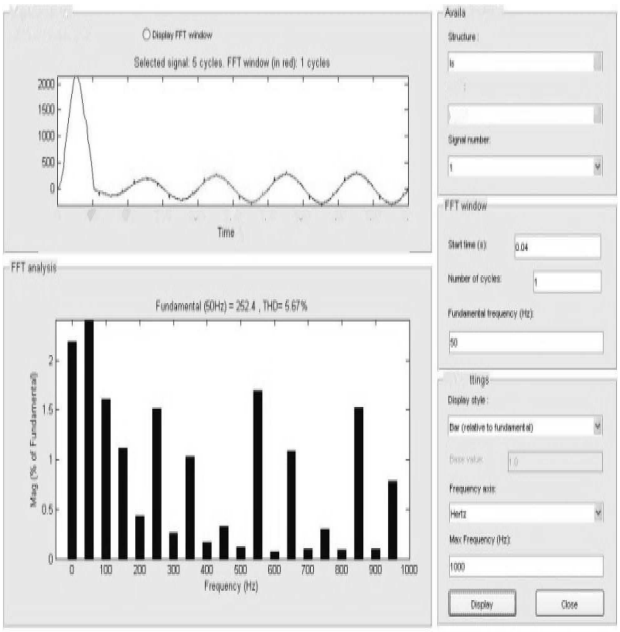

Fig.13. Harmonic spectrum of Phase-A Source current with DSTATCOM

VI. CONCLUSION

A DSTATCOM with five levels CHB inverter is investigated. Mathematical model for single H-Bridge inverter is developed which can be extended to multi H Bridge. The source voltage, load voltage, source current, load current, power factor simulation results under nonlinear loads are presented. Finally Matlab/Simulink based model is developed and simulation results are presented.

VII. REFERENCES

[1] J. Ganesh Prasad Reddy, K. Ramesh Reddy, “Design and Simulation of Cascaded H-Bridge Multilevel Inverter Based DSTATCOM for Compensation of Reactive Power and Harmonics”, vo1.20, no.4, pp. 357- 369. May. 2012.

[2] K.A Corzine. And Y.L Familiant, "a New Cascaded Multi-level H Bridge Drive:' IEEE Trans. Power. Electron .vol. I 7. no. I. pp. I 25-I 3 I. Jan 2002.

[3] J.S.Lai. And F.Z.Peng "Multilevel converters - A new breed of converters, "IEEE Trans. Ind. Appli. vo1.32. No.3. pp.S09-S17. May/ Jun. 1996.

[4] T.A.Maynard. M.Fadel and N.Aouda. "Modelling of multilevel converter:' IEEE Trans. Ind. Electron. vo1.44. pp.3S6-364. Jun. I 997.

[5] P.Bhagwat. And V.R.Stefanovic. "Generalized structure of a multilevel PWM Inverter:' IEEE Trans. Ind. Appln, VoI.IA-19. no.6, pp. I OS7-1069, Nov.!Dec. 1983.

[6] J.Rodriguez. Jih-sheng Lai, and F Zheng peng, "Multilevel Inverters; A Survey of Topologies, Controls, and Applications," IEEE Trans. Ind. Electron., vol.49, n04. Pp.724-738. Aug.2002.

[7] Roozbeh Naderi, and Abdolreza rahmati, "Phase-shifted carrier PWM technique for general cascaded inverters," IEEE Trans. Power. Electron. vo1.23, no.3, pp. I 257-I 269. May.2008.

[8] Bhim Singh, Kamal AlHaddad & Ambrish Chandra, 1999, A Review of Active Filter for Power Quality Improvements, IEEE Trans on Industrial Electronics, 46(S), pp.960970.

[9] Mauricio Angulo, Pablo Lezana, Samir Kouro, Jos'e Rodr'lguez and Bin Wu, "Level-shifted PWM for Cascaded Multilevel Inverters with Even Power Distribution" IEEE Power Electronics specialist conference, 17-21 June 2007, pp.2373-2378.

[10] B. P. McGrath and D. G. Holmes, "Multicarrier PWM strategies for multilevel inverters," IEEE Trans. Ind. Electron., vol. 49, no. 4, pp. 858- 867, August 2002.