International Journal of
Scientific Engineering and Technology Research

ISSN 2319-8885
Vol.05,Issue.33
October-2016,
Pages:6947-6953

www.ijsetr.com

Tax Compliance and Tax Collection at Toll Gate by Securing Fiscal Register by using RFID, ZIGBEE GPRS

THOMBRAPU SAMPATH KUMAR[1], M. MAHENDER[2]

[1]PG Scholar, Dept of ECE, Sindhura College of Engineering &Technology, NTPC, Godavarikhani, TS, India,
E-mail: sampathkmr69@gmail.com.

[2]Assistant Professor, Dept of ECE, Sindhura College of Engineering &Technology, NTPC, Godavarikhani, TS, India,
E-mail: mahi.489@gmail.com.

Abstract: Here in this project every vehicle will be having a unique identification number i.e. a RFID tag attached to the vehicle. The tag contains the details about the vehicle like name, number, type of vehicle, license, RC book details etc. At toll gate we have an RFID module, which will read the RFID tag of the vehicle passing in that way. By using the card we can pay the tax of the vehicle. The card will be placed in front of the card reader and the card is checked for validation and sufficient balance then the concerned amount will be reduced from the card and then the gate will be opened and the vehicle will be allowed. The details of the vehicle are displayed on LCD and also payment printed copy is provided to the vehicle driven by printer. All this information from transmitter section is transmitted to the receiver section by using Zigbee transceiver. The received information from transmitter section is given to microcontroller. The information is stored and displayed in PC. Then the official data has been uploaded into server internet by using GPRS terminal.

Keywords: RFID, LCD, GPRS, Zigbee.

I. INTRODUCTION

Many embedded systems have substantially different design constraints than desktop computing applications. No single characterization applies to the diverse spectrum of embedded systems. However, some combination of cost pressure, long life-cycle, real-time requirements, reliability requirements, and design culture dysfunction can make it difficult to be successful applying traditional computer design methodologies and tools to embedded applications. Embedded systems in many cases must be optimized for life-cycle and business-driven factors rather than for maximum computing throughput. There is currently little tool support for expanding embedded computer design to the scope of holistic embedded system design. However, knowing the strengths and weaknesses of current approaches can set expectations appropriately, identify risk areas to tool adopters, and suggest ways in which tool builders can meet industrial needs. If we look around us, today we see numerous appliances which we use daily, be it our refrigerator, the microwave oven, cars, PDAs etc. Most appliances today are powered by something beneath the sheath that makes them do what they do. These are tiny microprocessors, which respond to various keystrokes or inputs. These tiny microprocessors, working on basic assembly languages, are the heart of the appliances. We call them embedded systems. Of all the semiconductor industries, the embedded systems market place is the most conservative, and engineering decisions here usually lean towards established, low risk solutions.

Welcome to the world of embedded systems, of computers that will not look like computers and won't function like anything we are familiar with. Embedded system design is a quantitative job. The pillars of the system design methodology are the separation between function and architecture is an essential step from conception to implementation. In recent past, the search and industrial community has paid significant attention to the topic of hardware-software (HW/SW) code sign and has tackled the problem of coordinating the design of the parts to be implemented as software and the parts to be implemented as hardware avoiding the HW/SW integration problem marred the electronics system industry so long. In any large scale embedded systems design methodology, concurrency must be considered as a first class citizen at all levels of abstraction and in both hardware and software. Formal models & transformations in system design are used so that verification and synthesis can be applied to advantage in the design methodology. Simulation tools are used for exploring the design space for validating the functional and timing behaviors of embedded systems. Hardware can be simulated at different levels such as electrical circuits, logic gates, and RTL e.t.c. using VHDL description. In some environments software development tools can be coupled with hardware simulators, while in others the software is executed on the simulated hardware. The later approach is feasible only for small parts of embedded systems. Design of an embedded system using Intel's 80C188EB chip is shown in the figure. In order to reduce complexity, the design process is divided in

Copyright @ 2016 IJSETR. All rights reserved.

four major steps: specification, system synthesis, and implementation synthesis and performance evaluation of the prototype.

II. EXISTING AND PROPOSED METHODS

A. Existing Method

Data security in non-fiscal cash registers and non-fiscal printers is minimal. Because of unfair competition and protection of consumers which shall increase tax evasion and tax fraud? Here there were ample of chances to corrupt the data and cheat the customers and government usage of fiscal registers increase the work of audit and demand efficient sales officers. The main disadvantage of this is increase in grey economy.

B. Proposed Method

Here in this project every vehicle will be having a unique identification number i.e. a RFID tag attached to the vehicle. The tag contains the details about the vehicle like name, number, type of vehicle, license, RC book details etc. At toll gate we have an RFID module, which will read the RFID tag of the vehicle passing in that way. By using the card we can pay the tax of the vehicle. The card will be placed in front of the card reader and the card is checked for validation and sufficient balance then the concerned amount will be reduced from the card and then the gate will be opened and the vehicle will be allowed. The details of the vehicle are displayed on LCD and also payment printed copy is provided to the vehicle driven by printer. All this information from transmitter section is transmitted to the receiver section by using Zigbee transceiver. The received information from transmitter section is given to microcontroller. The information is stored and displayed in PC. Then the official data has been uploaded into server internet by using GPRS terminal.

III. BLOCK DIAGRAM & MODULES DESCRIPTION

A. Block Diagrams

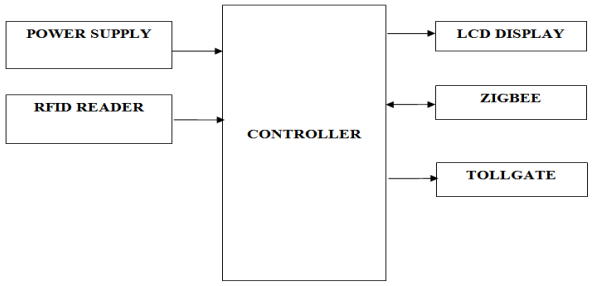

Fig.1. Tollgate section.

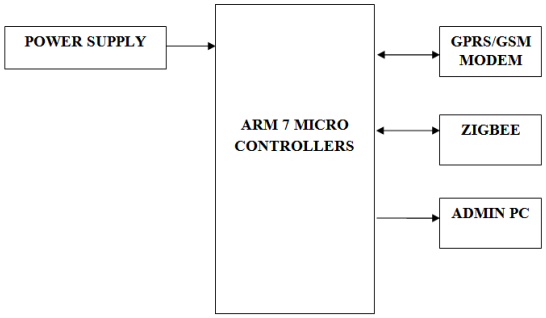

Fig.2. Admin Section.

B. Working Principle

In this project every vehicle will be having a unique identification number i.e. a RFID tag attached to the vehicle. The tag contains the details about the vehicle like name, number, license etc. At toll gate we have an RFID module, which will read the RFID tag of the vehicle passing in that way. By using the card we can pay the tax of the vehicle. The card will be placed in front of the card reader and the card is checked for validation and sufficient balance then the concerned amount will be reduced from the card and then the gate will be opened and the vehicle will be allowed. The details of the vehicle are displayed on LCD and also payment printed copy is provided to the vehicle driven by printer. All this information from transmitter section is transmitted to the receiver section by using Zigbee transceiver as shown in Figs.1 and 2. The received information from transmitter section is given to microcontroller. The information is stored and displayed in PC. Then the official data has been uploaded into server internet by using GPRS terminal.

C. Modules Description

1. LPC2148 Micro Controller: LPC2148 microcontroller board based on a 16-bit/32-bit ARM7TDMI-S CPU with real-time emulation and embedded trace support, that combine microcontrollers with embedded high-speed flash memory ranging from 32 KB to 512 KB. A 128-bit wide memory interface and unique accelerator architecture enable 32-bit code execution at the maximum clock rate. For critical code size applications, the alternative 16-bit Thumb mode reduces code by more than 30% with minimal performance penalty. The meaning of LPC is Low Power Low Cost microcontroller. This is 32 bit microcontroller manufactured by Philips semiconductors (NXP). Due to their tiny size and low power consumption, LPC2148 is ideal for applications where miniaturization is a key requirement, such as access control and point-of-sale.

Features of Lpc2148 Microcontroller:

- 16-bit/32-bit ARM7TDMI-S microcontroller in a tiny LQFP64 package.
- 8 KB to 40 KB of on-chip static RAM and 32 KB to 512 KB of on-chip flash memory; 128-bit wide interface/accelerator enables high-speed 60 MHz operation.
- USB 2.0 Full-speed compliant device controller with 2 KB of endpoint RAM. In addition, the LPC2148 provides 8 KB of on-chip RAM accessible to USB by DMA.
- One or two (LPC2141/42 Vs, LPC2144/46/48) 10-bit ADCs provide a total of 6/14 analog inputs, with conversion times as low as 2.44 ms per channel.
- Single 10-bit DAC provides variable analog output (LPC2148 only)
- Two 32-bit timers/external event counters (with four capture and four compare channels each), PWM unit (six outputs) and watchdog.
- Low power Real-Time Clock (RTC) with independent power and 32 kHz clock input

Lpc2148 Microcontroller Architecture:

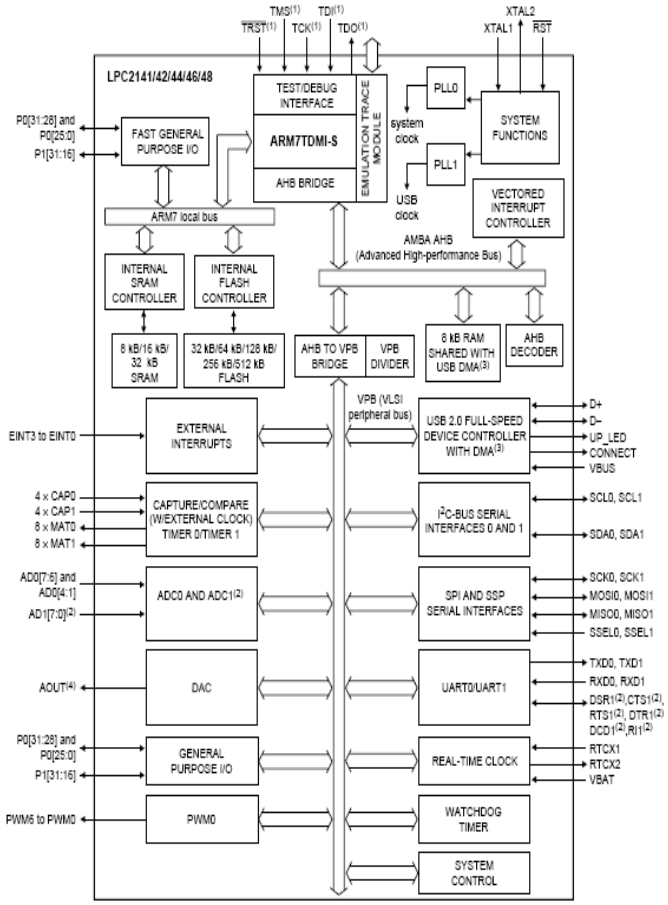

Fig.3. LPC2148 Microcontroller Architecture.

Fig3 shows the LPC2148 Microcontroller Architecture. The ARM7TDMI-S is a general purpose 32-bit microprocessor, which offers high performance and very low power consumption. The ARM architecture is based on Reduced Instruction Set Computer (RISC) principles, and the instruction set and related decode mechanism are much simpler than those of micro programmed Complex Instruction Set Computers (CISC). This simplicity results in a high instruction throughput and impressive real-time interrupt response from a small and cost-effective processor core. Pipeline techniques are employed so that all parts of the processing and memory systems can operate continuously. The ARM7TDMI-S processor also employs a unique architectural strategy known as Thumb, which makes it ideally suited to high-volume applications with memory restrictions, or applications where code density is an issue. The LPC2141/42/44/46/48 incorporates a 32 KB, 64 KB, 128 KB, 256 KB and 512 KB flash memory system respectively. This memory may be used for both code and data storage. Programming of the flash memory may be accomplished in several ways. It may be programmed In System via the serial port Due to the architectural solution chosen for an on-chip boot loader, flash memory available for user's code on LPC2141/42/44/46/48 is 32 KB, 64 KB, 128 KB, 256 KB and 500 KB respectively. 4.5.2: On-chip static RAM:

On-chip static RAM may be used for code and/or data storage. The SRAM may be accessed as 8-bit, 16-bit, and 32-bit. The LPC2141, LPC2142/44 and LPC2146/48 provide 8 KB, 16 KB and 32 KB of static RAM respectively. In case of LPC2146/48 only, an 8 KB SRAM block intended to be utilized mainly by the USB can also be used as a general purpose RAM for data storage and code storage and execution. The pin connect block allows selected pins of the microcontroller to have more than one function. Configuration registers control the multiplexers to allow connection between the pin and the on chip peripherals. Peripherals should be connected to the appropriate pins prior to being activated, and prior to any related interrupt(s) being enabled. Activity of any enabled peripheral function that is not mapped to a related pin should be considered undefined. Device pins that are not connected to a specific peripheral function are controlled by the GPIO registers. Pins may be dynamically configured as inputs or outputs. Separate registers allow setting or clearing any number of outputs simultaneously. The value of the output register may be read back, as well as the current state of the port pins.LPC2141/42/44/46/48 introduces accelerated GPIO functions over prior LPC2000 devices:

2. Power Supply: There are many types of power supply. Most are designed to convert high voltage AC mains electricity to a suitable low voltage supply for electronic circuits and other devices as shown in Fig.4. A power supply can by broken down into a series of blocks, each of which performs a particular function. For example a 5V regulated supply:

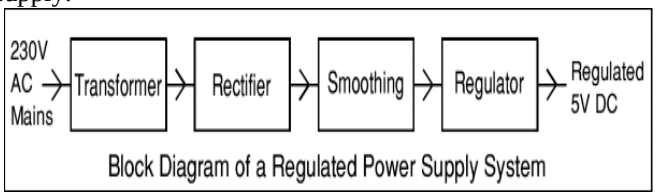

Fig.4. Block diagram of a regulated power supply system.

Each of the blocks is described in more detail below:

- Transformer - steps down high voltage AC mains to low voltage AC.
- Rectifier- converts AC to DC, but the DC output is varying.
- Smoothing - smooth's the DC from varying greatly to a small ripple.
- Regulator - eliminates ripple by setting DC output to a fixed voltage.

Transformer: Transformers convert AC electricity from one voltage to another with little loss of power. Transformers work only with AC and this is one of the reasons why mains electricity is AC. Step-up transformers increase voltage, step down transformers reduce voltage. Most power supplies use a step-down transformer to reduce the dangerously high mains voltage (230V in UK) to a safer low voltage. The input coil is called the primary and the output coil is called the secondary. There is no electrical connection between the two coils; instead they are linked by an alternating magnetic field

created in the soft-iron core of the transformer. The two lines in the middle of the circuit symbol represent the core. Transformers waste very little power so the power out is (almost) equal to the power in. Note that as voltage is stepped down current is stepped up.

Bridge Rectifier: A bridge rectifier can be made using four individual diodes, but it is also available in special packages containing the four diodes required. It is called a full-wave rectifier because it uses the entire AC wave (both positive and negative sections). 1.4V is used up in the bridge rectifier because each diode uses 0.7V when conducting and there are always two diodes conducting, as shown in the diagram below. Bridge rectifiers are rated by the maximum current they can pass and the maximum reverse voltage they can withstand (this must be at least three times the supply RMS voltage so the rectifier can withstand the peak voltages). Alternate pairs of diodes conduct, changing over the connections so the alternating directions of AC are converted to the one direction of DC.

Regulator: Voltage regulator ICs are available with fixed (typically 5, 12 and 15V) or variable output voltages. They are also rated by the maximum current they can pass. Negative voltage regulators are available, mainly for use in dual supplies. Most regulators include some automatic protection from excessive current ('overload protection') and overheating ('thermal protection'). Many of the fixed voltage regulators ICs have 3 leads and look like power transistors, such as the 7805 +5V 1A regulator shown on the right. They include a hole for attaching a heat sink if necessary.

3. Liquid Crystal Display (LCD): LCD is a type of display used in digital watches and many portable computers. LCD displays utilize to sheets of polarizing material with a liquid crystal solution between them as shown in Fig.5. An electric current passed through the liquid causes the crystals to align so that light cannot pass through them.

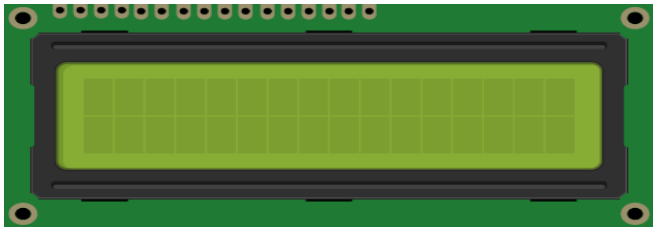

Fig.5. Block diagram of LCD.

4. GSM Module: GSM is a digital mobile telephone system that is widely used in Europe and other parts of the world. GSM uses a variation of Time Division Multiple Access (TDMA) and is the most widely used of the three digital wireless telephone technologies (TDMA, GSM, and CDMA). GSM digitizes and compresses data, then sends it down a channel with two other streams of user data, each in its own time slot as shown in Fig.6. It operates at either the 900 MHz or 1,800 MHz frequency band. GSM is the de facto wireless telephone standard in Europe. GSM has over one billion users worldwide and is available in 190 countries. Since many GSM network operators have roaming agreements with foreign operators, users can often continue to use their mobile phones when they travel to other countries.

Fig.6. Structure of a GSM network (key elements).

5. General Packet Radio Systems (GPRS): GPRS (General Packet Radio Service) is a packet based wireless communication service that offers data rates from 9.05 up to 171.2 Kbps and continuous connection to the Internet for mobile phone and computer users. GPRS is based on GSM communications and complements existing services such as circuit switched cellular phone connections and the Short Message Service (SMS). GPRS offers much higher data rates than GSM and can be combined with 3G technologies such as EDGE (Enhanced Data-Rates for GSM Evolution) to give even higher bit-rates. It offers many benefits for customers and network operators: such as volume (rather than time) dependent billing and more efficient use of network resources.

6. Introduction to RFID: RFID stands for Radio Frequency Identification and is a term that describes a system of identification. RFID is based on storing and remotely retrieving information or data as it consists of RFID tag, RFID reader and back-end Database. RFID tags store unique identification information of objects and communicate the tags so as to allow remote retrieval of their ID. RFID technology depends on the communication between the RFID tags and RFID readers. The range of the reader is dependent upon its operational frequency. Usually the readers have their own software running on their ROM and also, communicate with other software to manipulate these unique identified tags. Basically, the application which manipulates tag deduction information for the end user, communicates with the RFID reader to get the tag information through antennas. Many researchers have addressed issues that are related to RFID reliability and capability. RFID is continuing to become popular because it increases efficiency and provides better service to stakeholders. RFID technology has been realized as a performance differentiator for a variety of commercial

applications, but its capability is yet to be fully utilized. The RFID system consists of various components which are intergraded in a manner defined in the above section. This allows the RFID system to deduct the objects (tag) and perform various operations on it. The integration of RFID components enables the implementation of an RFID solution.

Tags: Tags contain microchips that store the unique identification (ID) of each object. The ID is a serial number stored in the RFID memory. The chip is made up of intergraded circuit and embedded in a silicon chip. RFID memory chip can be permanent or changeable depending on the read/write characteristics. Read-only and rewrite circuits are different as read-only tag contains fixed data and cannot be changed without re-program electronically. On the other hand, re-write tags can be programmed through the reader at any time without any limit. RFID tags can be different sizes and shapes depending on the application and the environment at which it will be used. A variety of materials are intergraded on these tags. For example, in the case of the credit cards, small plastic pieces are stuck on various objects, and the labels. Labels are also embedded in a variety of objects such as documents, cloths, manufacturing materials etc.

Active Tags: Active RFID tags have their own internal power source which is used to power any ICs that generate the outgoing signal. Active tags are typically much more reliable (e.g. fewer errors) than passive tags due to the ability for active tags to conduct a "session" with a reader. Active tags, due to their onboard power supply, also transmit at higher power levels than passive tags, allowing them to be more effective in "RF challenged" environments like water (including humans/cattle, which are mostly water), metal (shipping containers, vehicles), or at longer distances as shown in Fig.7. Many active tags have practical ranges of hundreds of meters, and a battery life of up to 10 years. Some active RFID tags include sensors such as temperature logging which have been used in concrete maturity monitoring or to monitor the temperature of perishable goods. Other sensors that have been married with active RFID include humidity, shock/vibration, light, radiation, temperature and atmospherics like ethylene. Active tags typically have much longer range (approximately 300 feet) and larger memories than passive tags, as well as the ability to store additional information sent by the transceiver. The United States Department of Defense has successfully used active tags to reduce logistics costs and improve supply chain visibility for more than 15 years. At present, the smallest active tags are about the size of a coin and sell for a few dollars.

Fig.7. Active RFID Tag.

Passive Tags: Passive RFID tags have no internal power supply. The minute electrical current induced in the antenna by the incoming radio frequency signal provides just enough power for the CMOS integrated circuit in the tag to power up and transmit a response. The lack of an onboard power supply means that the device can be quite small: commercially available products exist that can be embedded in a sticker, or under the skin. As of 2006, the smallest such devices measured 0.15 mm × 0.15 mm, and are thinner than a sheet of paper (7.5 micrometers). The lowest cost EPC RFID tags, which are the standard chosen by Wal-Mart, DOD, Target, Tesco in the UK and Metro AG in Germany, are available today at a price of 5 cents each as shown in Fig.8. The addition of the antenna creates a tag that varies from the size of a postage stamp to the size of a post card. Passive tags have practical read distances ranging from about 10 cm (4 in.) (ISO 14443) up to a few meters (EPC and ISO 18000-6) depending on the chosen radio frequency and antenna design/size due to their simplicity in design they are also suitable for manufacture with a printing process for the antennas.

Fig.8. Passive RFID Tags.

Readers: The RFID reader sends a pulse of radio energy to the tag and listens for the tag's response. The tag detects this energy and sends back a response that contains the tag's serial number and possibly other information as well. In simple RFID systems, the reader's pulse of energy functioned as an on-off switch; in more sophisticated systems, the reader's RF signal can contain commands to the tag, instructions to read or write memory that the tag contains, and even passwords. Historically, RFID readers were designed to read only a particular kind of tag, but so-called multimode readers that can read many different kinds of tags are becoming increasingly popular. RFID readers are usually on, continually transmitting radio energy and awaiting any tags that enter their field of operation. However, for some applications, this is unnecessary and could be undesirable in battery-powered devices that need to conserve energy. Thus, it is possible to configured an RFID reader so that it sends the radio pulse only in response to an external event. For example, most electronic toll collection systems have the reader constantly powered up so that every passing car will be recorded. On the other hand, RFID scanners used in veterinarian's offices are frequently equipped with triggers and power up the only when the trigger is pulled. Like the tags themselves, RFID readers come in many sizes. The largest readers might consist of a desktop personal computer with a special card and multiple antennas connected to the card through shielded cable. Such a

reader would typically have a network connection as well so that it could report tags that it reads to other computers. The smallest readers are the size of a postage stamp and are designed to be embedded in mobile telephones. The Reader Module used in this Project is EM 18 Reader module as shown in Fig.9.

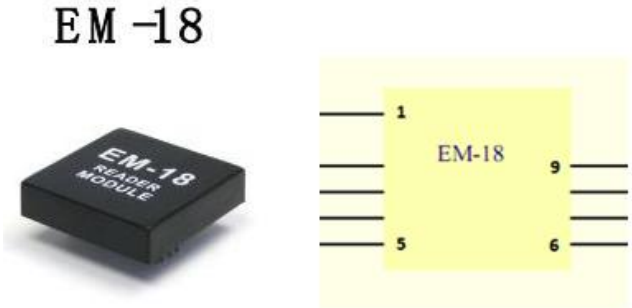

Fig.9. EM-18 Reader Module.

7.8051 Microcontroller: Microprocessors and micro-controllers are widely used in embedded systems products. Microcontroller is a programmable device. A microcontroller has a CPU in addition to a fixed amount of RAM, ROM, I/O ports and a timer embedded all on a single chip. The fixed amount of on-chip ROM, RAM and number of I/O ports in microcontrollers makes them ideal for many applications in which cost and space are critical.

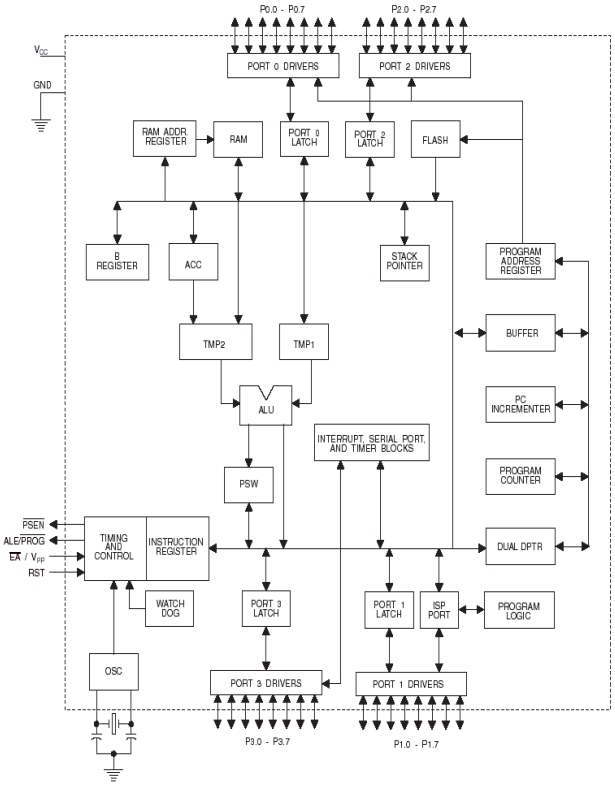

Fig.10. Block diagram of 8051 Microcontroller.

The Intel 8051 is Harvard architecture, single chip microcontroller (µC) which was developed by Intel in 1980 for use in embedded systems. It was popular in the 1980s and early 1990s, but today it has largely been superseded by a vast range of enhanced devices with 8051-compatible processor cores that are manufactured by more than 20 independent manufacturers including Atmel, Infineon Technologies and Maxim Integrated Products. 8051 is an 8-bit processor, meaning that the CPU can work on only 8 bits of data at a time as shown in Fig.10. Data larger than 8 bits has to be broken into 8-bit pieces to be processed by the CPU. 8051 is available in different memory types such as UV-EPROM, Flash and NV-RAM. The present project is implemented on Keil vision. In order to program the device, proload tool has been used to burn the program onto the microcontroller. The features, pin description of the microcontroller and the software tools used are discussed in the following sections.

8. Zigbee Technology: In order to meet the aim of low cost and low power for wireless network, IEEE Standard Board developed a low rate WPAN standard 802.15.4 in 2000. IEEE802.15.4 defines the PHY layer and MAC layer. MAC layer defines the principle how to share air routes by many 802.15.4 radio signals worked in the same area. However, the definition of the PHY layer and MAC layer is not sufficient to ensure that different devices can be dialogue each other, so Zigbee appears. Zigbee is an intelligent digital protocol, operating at three frequencies, with the commonest one being at 2.4GHz as shown in Fig.11. At this operating frequency, data rates up to 250kbit/s are claimed. This is a relatively low bandwidth, compared to other protocols such as Bluetooth. However, the low transmission rate reduces power consumption, with a typical module consuming 45 Ma when transmitting.

Fig.11. ZigBee Modem.

IV. RESULTS

Results of this paper is as shown in bellow Figs.12 and 13.

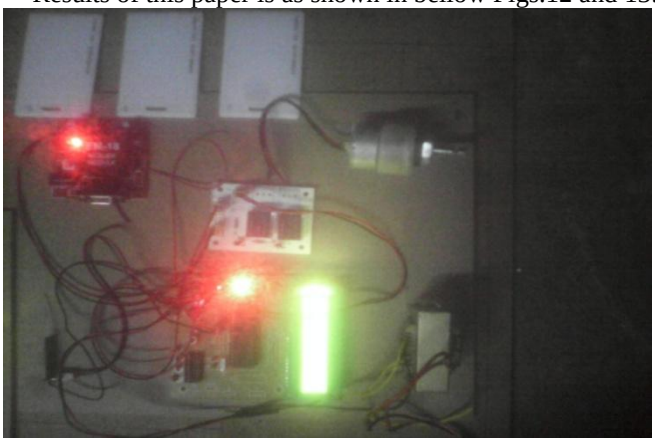

Fig.12. As soon as the Power is ON the Kit is ready.

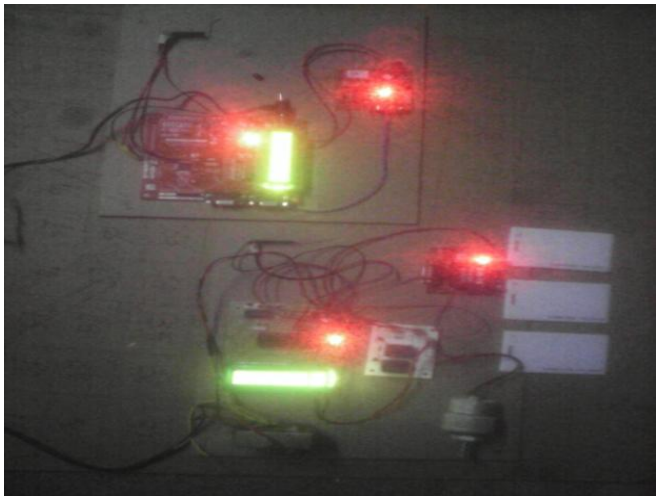

Fig.13. Based on the received UID relevant road sign information is displayed on LCD.

V. CONCLUSION & FUTURE SCOPE

The official data of The Republic of Serbia show that the implementation of fiscal registers with external GPRS terminals has increased the relevant tax collection between 20% and 30% depending on a year, while grey economy spread has decreased by 30%. The official data of RepublikaSrpska show that the implementation of fiscal cash registers with internal GPRS terminals has increased the relevant tax collection for 26% in 2008, 30% in 2009, which was bigger than predicted (20%). Fiscal registers with GPRS terminals according to Table IT decrease business-running expenses in comparison with utilization of fiscal registers or non-fiscal registers, when all costs are calculated, such as: accountant costs, purchasing cost, regular purchasing of journal tapes, change of already printed journal tapes with empty journal tapes many times per day for each fiscal register and stocking of printed journal tapes, as well as change of journal memory and fiscal memory every 5 years or less.

VI. REFERENCES

[1] Combating VAT fraud in the EU, the way forward, International VAT association, March 2007.

[2] L. Kovacs, "Tackling VAT fraud: Possible ways forward," speech, European Commission, Taxation and Customs Union, 2007.

[3]A.Wiedow, "Tackling VAT fraud: Possible ways forward," European Commission, Taxation and Customs Union, 2007.

[4] Stopping the carousel: missing trader fraud in the EU, House of Lords, European Union Committee, 20tl, Report of session 2006-07.

[5] Report on EU customs enforcement of intellectual property rights, results at the European border-2008, European Commission, Taxation and Customs Union, Brussels, 2008.

[6] Communication from the commission to the council, the European parliament and the European economic and social committee on a customs response to latest trends in counterfeiting and piracy, Commission of the European communities, 2005.

[7] Summary of community customs activities on counterfeit and piracy, results at the European border-2006, European Commission, Taxation and Customs Union, Brussels, 2008.

[8] D. Merriman, "Understand, Measure, and combat tobacco smuggling," World bank, Economics of tobacco toolkit, 2001.

Author's Profile:

Thombrapu Sampath Kumar, Pursuing His Master of Technology in Embedded Systems Stream In Department of Electronics and Communication Engineering From Sindhura College of Engineering &Technology, NTPC, Godavarikhani, Ramagundum, Telangana 505208, Email: sampathkmr69@gmail.com.

M.Mahender,Presently Working as Assistant Professor in Department For Electronics And Communication Engineering From Sindhura College of Engineering &Technology, NTPC, Godavarikhani, Ramagundum, Telangana 505208, Email: mahi.489@gmail.com**.**